THE UNIVERSITY OF ALBERTA

AN ENQUIRY INTO THE EFFECT OF EXPOSURE TO ADVERTISEMENTS ON SUBSEQUENT PERCEPTIVITY OF SIMILAR ADVERTISEMENTS

by

Dale Herbert Berg

A THESIS

SUBMITTED TO THE FACULTY OF GRADUATE STUDIES

IN PARTIAL FULFILMENT OF THE REQUIREMENTS FOR THE DEGREE

OF MASTER OF ARTS

DEPARTMENT OF SOCIOLOGY

EDMONTON, ALBERTA

APRIL, 1966

[illegible]

[illegible]

[illegible]

A THESIS SUBMITTED

IN PARTIAL FULFILMENT OF THE REQUIREMENTS FOR THE DEGREE

DOCTOR OF PHILOSOPHY IN CHEMISTRY (PHYSICAL)

IN THE

[illegible]

[illegible]

BY

[illegible]

M.Sc.

ON THERMODYNAMIC PROPERTIES OF BINARY SOLUTIONS

A THESIS FOR THE DEGREE OF DOCTOR OF PHILOSOPHY

IN CHEMISTRY (PHYSICAL)

UNIVERSITY OF ALBERTA

FACULTY OF GRADUATE STUDIES

The undersigned certify that they have read, and recommend to the Faculty of Graduate Studies for acceptance, a thesis entitled "An Enquiry into the Effect of Exposure to Advertisements on Subsequent Perceptivity of Similar Advertisements" submitted by Dale Herbert Berg in partial fulfilment of the requirements for the degree of Master of Arts.

ABSTRACT

This study tests the hypothesis that forced exposure to advertising lowers the threshold for perceiving the advertisements. The enquiry gains its import in its relevance to the basic question underlying the use of all mass communications: what is the effect of continued exposure?

Using two groups, control and experimental, of late teenage girls, a straightforward "before-after" experiment was designed wherein the experimental group was exposed to a certain form of advertising.

The study consisted of three phases. The first phase involved the determination of a "perceptual sensitivity" base score. The second phase involved exposing the experimental group to the form of advertising under study. The third phase consisted of remeasuring the perceptual sensitivity of both groups.

The study demonstrated that forced exposure does increase perceptivity. The experimental group showed significant differences in perceptual level from the control group when remeasured in the third phase.

If "attitude" is defined as "a tendency to respond to certain stimuli in a particular manner," it can be concluded on the basis of this enquiry that forced exposure to stimuli results in attitudinal change.

TABLE OF CONTENTS

LIST OF TABLES

LIST OF FIGURES

THE PROBLEM:

The present century has witnessed tremendous changes in the use of mass media to sell commodities and to control people. The utilization of mass communication has expanded at almost geometric progression. Magazines, for instance, are published in terms of hundreds of thousands per issue and are dependent upon their circulation figures for the continued support of their advertisers. Radio and television during certain key hours of the day reach hundreds of thousands of people. Placed in the right magazines or newspapers, televised at the right time, or broadcast via radio, the desired message can reach the eyes or ears of a small nation of people.

In spite of the fantastic possibilities of exposing populations to propaganda, questions persist regarding the effects of exposure. It is, for example, one matter to say that eight hundred thousand readers have seen a particular issue of a magazine, and an entirely different matter to contend that through their exposure they have absorbed the desired message. Even more bothersome is the problem of the connection between exposure and attitude change. Substantial evidence is still lacking to support the common belief that attitude change follows exposure.

Some of the most contradictory evidence on exposure effect comes from the field of television advertising. At the time that viewing polls report strong audience objection to certain television advertisements, the sponsors report increased sales consequent upon

a particular advertising effort. Ads which are classified by viewers as being ridiculous or insulting to intelligence have often resulted in increased sales. While social scientists may look for other factors, the advertisers assume that the upward sales curve is due to the particular advertisement.[1]

The faith placed in the effectiveness of the mass media is evidenced by the amount expended each year on advertising and advertising research. In spite of the fact that a few isolated cases exist in which a company has not advertised and has been successful (e.g. The Hershey Company),[2] the mass media are regarded as a highly effective means of changing attitudes and consumer habits.

Almost unnoticed is the research being conducted to test empirically the effectiveness of mass media in changing attitudes. Many of these studies have produced preliminary findings which would indicate that mass media are not as effective in reaching people and in changing attitudes as was first believed. Yet in spite of these studies which would question the unqualified power of advertising, media use increases.

Of special interest to this investigation is the effectiveness of magazine advertising in changing attitudes of the consumer. The extensive use being made of magazines for advertising purposes would

---

[1]"Advertising: The Mammoth Mirror," Time, LXXX (October 12, 1962), pp. 77-82.

[2]"Sweet Business," Time, LXXIX (March 2, 1962), p. 52.

seem to indicate that they are effective vehicles. The cost of a single page of advertising in the more familiar and widely circulated magazines would similarly lead one to believe that the end is well worth the price.[3] But again, as in the case of mass media in general, there is great lack of empirical support for the assumption that magazine advertisements are effective means of influencing the consuming public.

Some investigators in the field have suggested that the impact of advertising is gained through repetition. The idea is that perception of advertisements is generally at such a low level of interest that it takes a considerable amount of exposure to produce even a negligible effect. Krugman suggests that much advertising material is learned according to principles that hold for the memorization of meaningless nonsense material.[4]

Lucas reports that when readers of magazines were shown current issues and asked to report on advertisements that were familiar to them, many reported familiarity with ads which had not yet been published.[5] This finding would indicate that familiarity

---

[3] E.g. cost per page (black & white), Life, $33,860.00; McCall's $31,000.00; and Vogue, $4,350.00 in 1963. "Q and Advertising," McCall's, XCI (May, 1964), p. 30.

[4] Herbert E. Krugman, "The Impact of Television Advertising: Learning Without Involvement," Public Opinion Quarterly, XXIX (Fall, 1965), pp. 349-356.

[5] D.B. Lucas, "A Rigid Technique for Measuring the Impression Values of Specific Magazine Advertisements," Journal of Applied Psychology, XXIV (1940), pp. 778-790.

is at best superficial. Lucas' study, which preceded the work of Krugman by twenty-five years, already suggested that familiarity with advertisements was at a low level of interest.

In spite of the suggested low level of awareness of magazine advertisements, reader response indicates that at least some people are concerned about the content of advertisements. Recently, there has been a considerable expression of concern regarding advertisements of brassieres and girdles that picture models in these garments.[6] Frequently, distraught readers of the various publications that carry these advertisements write letters to the editor expressing fears that these photographs are having adverse effects on those who see them, especially males and children.

Recognizing the fact that the first attempts at advertising these garments using models met with opposition, it is not surprising to find that this opposition continues as the use of such methods increases. The depth research conducted by the Maidenform Company verifies the assumption that such advertising

---

[6] See for example, "The 'big sell' is aimed at our young people, a subtle form of pornography which is passed over as legitimate advertising. Are we to allow the big money of these girdle and bra companies to set the standards of what appears in our family paper?....As for myself, I find the large lingerie ads so annoying I never read anything else on the page where they are printed." Letter to the editor in The Edmonton (Alberta) Journal, June 4, 1965, and "I suggest these crude pictures be relegated to the walls of the corset departments in stores that sell the item. Ladies in my club agree. And we intend to boycott the brands that resort to this type of advertising." Letter to the editor in The Edmonton Journal, November 17, 1965.

would not at first be found acceptable by the general public.[7]

In spite of Krugman's contention that much of advertising material is learned on a very low level of interest, the amount of resistance stimulated by using photographs in brassiere and girdle advertising suggests that such advertisements are being noticed on more than a superficial level by at least some viewers. Krugman's conclusions might still be applied to the copy of these advertisements less often noticed.

It is of interest to note that in spite of some resistance expressed by the public, brassiere and girdle manufacturers are making more use of models in their advertising. Not only are the ads being seen more, their content is becoming bolder.[8] It would seem from the increased use of this form of advertising that the public in general is responding favorably to viewing models in undergarments, or at least so the advertisers feel.

A key issue remains the question of the effects of continued exposure. Shall it be assumed, for instance, that continued exposure results in increased awareness? If this

---

[7] Vance Packard, The Hidden Persuaders (New York: David McKay Company, 1957), pp. 85-86.

[8] "I dreamed I swayed the jury in my Maidenform bra," in Glamour, June, 1963; "Indulge yourself in a delicious new 'Confection' by Maidenform, low, lacy 'Confection' lined with fiberfill, it makes you feel so yum," in Redbook, November, 1965; "Ever wish you could get a little more out of a bra than you put into it? Now you can because of White Lie with Light-Fill...." in Mademoiselle, October, 1964; "Do you want a shape like a bra? Or do you want a shape like a woman? A bra is hard and pointy. A woman is soft and round. Now Warner's has the first bra that's all woman. The Body Bra..." in McCall's, September, 1965.

should be demonstrated to be true, and much evidence would suggest it to be so, then it might be asked if increased awareness may not also involve attitude change? It would then seem that by the continued use of such advertising it may be possible to reduce and perhaps even eliminate public aversion. It might be postulated that increased perceptivity results in attitudinal change to a degree which reduces aversion to such forms of advertising, if for no other reason than that of familiarity.

At least two questions are raised: (a) Does exposure to advertising lower the threshold for perceiving the ads?, and (b) If so, is increased sensitivity (one index of "attitude") associated with an altered meaning assigned to the stimuli (for example, reduced aversion)?[9]

This investigation is concerned with the first of these questions.

PREVIOUS RESEARCH:

Studies in mass communications deal in great measure with attitude and opinion change regarding controversial political issues, and for this reason may have little bearing on the issue here. In the area of mass communications generalization is nearly impossible. Klapper tells us, "The relative efficacy of the mass

---

[9] Attitude defined as the tendency to respond in a particular fashion to specified stimuli. A classic definition of attitude and one given continued support by social psychologists, c.f., for example, Gordon Trasler, The Explanation of Criminality, London: Routledge & Kegan Paul, 1962, p. 66.

media varies so widely from one topical area to another as to defy generalization."[10]

In short, there are many claims regarding the effectiveness of the printed page in advertising, but a negligible amount of supportive evidence. The methodological problems encountered in such studies of advertising effectiveness are myriad. Lucas' study, earlier cited, indicates the difficulties which might be encountered in trying to measure such a concept as familiarity, when people have been shown to claim familiarity with material yet unpublished.

Advertising firms conduct a great amount of research into the effects of advertising, but the results of their studies are not obtainable.[11] Since these studies have relevance to current advertising campaigns and because the competition for the advertiser's dollar is presently so keen, there appears to be little chance that the results will ever find their way into the academic world.[12]

One suspects, however, that much of the research being conducted by the advertising companies is not of high quality. What little the author has seen of these studies leaves much to be desired on points of method.

---

[10]. J.T. Klapper, cited in, Bernard Berelson and Gary A. Steiner, Human Behavior: An Inventory of Scientific Findings (New York: Harcourt, Brace and World, 1960), pp. 546-547.

[11]Carl I. Hovland, Effects of the Mass Media of Communication (Vol. II of Handbook of Social Psychology, ed. Gardner Lindzey. 2 vols.: Reading, Massachusetts: Addison-Wesley, 1954), p. 1094.

[12]Thirty-five letters were written to brassiere and girdle manufacturers asking about their advertising programs and explaining the nature of this research. No replies were received.

[illegible]

[illegible]

[illegible]

It would appear that the study of advertising effectiveness has been left largely to the advertising companies. They in turn have conducted studies to suit their own ends of satisfying the advertiser that his campaigns are effective. That these studies lack methodological sophistication is of minor importance to an advertiser who may not know the meaning of a well-controlled study. The result is an almost total lack of empirical data on the effectiveness of advertising by the printed page. With the advent of television, any hopes for such studies have been eclipsed with the widespread interest of the researchers in the effects of this medium.

Carl Hovland referring to the book, What Reading Does to People, says, "It is disappointing to find how few solid quantitative data are available here. But there are such formidable difficulties in the way of accurate analyses of the effects of reading books and newspapers created by problems of evaluating exposure over the long period of time during which effects are produced and of determining the interaction between the effects of reading and other media - that one must be patient and not expect quick research answers."[13] Before answers were obtained, interest shifted to the field of television advertising and propaganda effectiveness.

Given the paucity of research on the effectiveness of magazine advertising, we attended to a related matter, studies of the effects

---

[13]Hovland, op. cit., p. 1063.

of familiarity upon perceptual sensitivity. Experimental psychology is replete with studies regarding the influence of familiarity upon perception; however, the majority of these studies is concerned with the use of nonsense material. Although the conclusions of these studies are suggestive for our concern, it was felt that the drawing of a direct relationship between studies of meaningless materials and advertisements would be unwarranted.

The one authoritative and almost exclusive work pertaining to our interests is a book on the psychology of advertising by Lucas and Britt.[14] This work deals with the various methods of advertising and the factors related to effective advertising. Examples of effective advertisements are interesting and also quite outdated, probably due to the difficulties encountered in securing permission to use more recent advertisements in such a book. Generally speaking, works on advertising methods are based on common sense. Evidence for these "plausible assumptions" is meagre.

Thus in terms of academic research the present study has no known published predecessors. (There may be similar studies filed in the archives of advertising research firms.) What follows is an enquiry into the effects of exposure to a specified form of advertising on the perception of subsequent advertisements of like content.

This study tests the hypothesis that forced exposure results in increased perceptivity. Using late teenage girls as subjects, an

---

[14] Darrell B. Lucas and Steuart H. Britt, Advertising Psychology and Research (New York: McGraw-Hill Company, 1950).

an attempt was made to increase their awareness of brassiere and girdle advertisements by experimentally exposing them to a considerable amount of such advertising.

SUBJECTS:

Sixty young women resident in the first-year class of a nursing school served as subjects. These 60 were drawn from a class of 117 girls. These women ranged in age from 16 to 20, with the mean age at 18. The modal age (34 subjects) was also 18. These 60 women were divided into an experimental and a control group with age distributions as shown in Table I.

TABLE I

AGE DISTRIBUTION OF SUBJECTS

Age	Control Group	Experimental Group
16	1	-
17	5	7
18	18	16
19	6	6
20	-	1

The fact that they were drawn from an exclusive population, first year nursing students, would not seem to be a problem in terms of the validity of the study. Indeed the fact that these girls were in residence and new to the school made the conduct of the study quite easy due to the built-in incentive to cooperate

[illegible]

[illegible]

[illegible]

found among such matriculating students.

All participants in the study, even those eliminated in the First Phase, were purposely misled regarding the goals of the study. Prior to any testing, the students were told that the study was concerned with their reactions to all forms of magazine advertising. The researchers were said to be interested in their reactions to various layout designs, colours, copy, and brand-name effectiveness. In other words, what was supposedly being studied was their personal reaction to numerous magazine advertisements.

Prior to the Second Phase, subjects were instructed to give the advertisements under study their utmost attention and to respond in terms of their personal reaction. They were impressed with the idea that what was desired was their honest reaction so that advertising effectiveness could be reliably studied.

Follow-up questioning, to be described later, indicated that the deception worked without exception. The subjects seemed unaware of the actual purpose of the study.

TECHNIQUE:

A powerful technique for the assessment of attitude measures attitude ("tendency to act") as a function of differential perceptual threshold. A stereoscope is used to present a subject with two different pictures, one to each eye, simultaneously, for a "just-perceivable" interval.

In previous research the apparatus consisted of two slide projectors, each with its own shutter, mounted side-by-side. The shutters were coupled by a mechanical device that made it possible to present the stimuli simultaneously for a timed exposure. Exposure times varied from 1/50 of a second to 1/200 of a second for simple stimuli. The subject was seated before a regular projection screen in a darkened room. The field of vision was restricted, after time for dark-adaptation, to the experimental stimuli.[15]

---

[15] Engel found in early experiments that when two pictures were presented, such as one right side up and the other upside down, the one most in line with past experience was preferred and would be "seen." E. Engel, "The Role of Content in Binocular Resolution," American Journal of Psychology, 69 (1956), pp. 87-91.

Using the technique and suggestions which emanated from Engel's work, Bagby found that a picture of a Mexican bullfight coupled with a picture of a baseball game presented to Mexican subjects would result in the bullfight being most often "perceived." J. Bagby, "A Cross Cultural Study of Perceptual Predominance in Binocular Rivalry," Journal of Abnormal Social Psychology, 54 (1957), pp. 331-334.

The most significant work with the stereoscope has been conducted by Hans Toch in the study of violence. Pictures of violence (e.g. a stabbing or car being broken into) when coupled with neutral pictures (e.g. a farmer plowing a field or a workman operating a lathe) have shown interesting results: law enforcement officials and inmates of penal institutions who have been convicted of assault demonstrate higher perception of violence. The phenomenon of increased violence-perception in law enforcement personnel raises the question whether the perception of violence is produced through training or selection. E. Shelley and Hans Toch, "The Perception of Violence as an Indicator of Adjustment," Unpublished manuscript. Michigan State University and Hans Toch, "The Stereoscope, a New Frontier in Psychological Research," The Research Newsletter, California Department of Corrections, Vol. 3, No. 3-4 (1961), pp. 18-23.

In follow-up research to Shelley-Toch, Oval Putoff demonstrated a significant difference in violent pictures perceived by assaultive versus non-assaultive groups. Oval Putoff, "A Study of the Perception of Violence," The Research Newsletter, California Department of Corrections, Vol. 4, No. 1-2 (1962), pp. 22-24.

The present investigation represents a modification of the usual technique in that we have used a viewbox with divided perceptual fields. Contrasting pictures were thrown against a translucent screen so that a different image was presented to each eye. Using a single 35mm transparency with two pictures on it, positioned to project exactly on the two perceptual fields, it was possible to use only one projector mounted with a shutter. In this way the problem of sychronizing two shutters with a mechanical coupling device was eliminated. The use of one shutter assured that the presentations were simultaneous.

The viewbox was constructed out of plywood and painted on the inside with stove-black to reduce reflection. A translucent screen was mounted on its front. A center panel divided the box in half so that it was impossible for the subject to see both pictures with just one eye. The box was designed so that advertisements were projected to the subject at actual size. Because the slides were all taken with a rigidly mounted camera in a clearly defined space, all of the pictures were identically aligned on the translucent screen. The apparatus design and placement is illustrated in Figure 1.

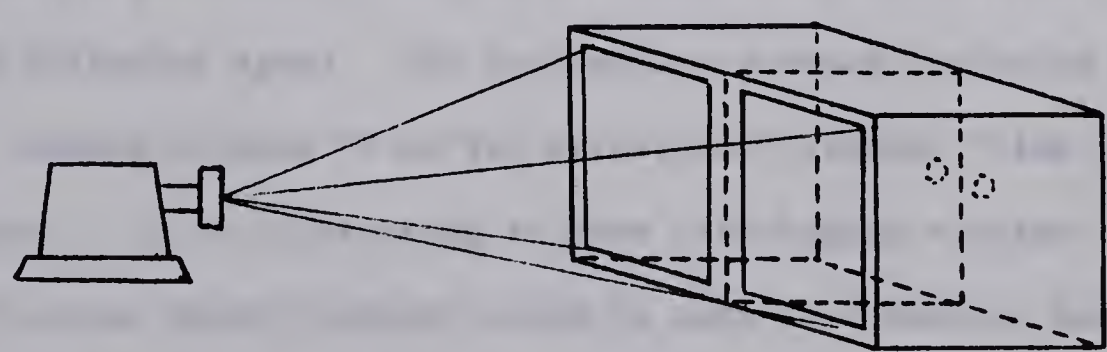

FIGURE 1.

Apparatus Design and Layout for Stereoscopic Presentation

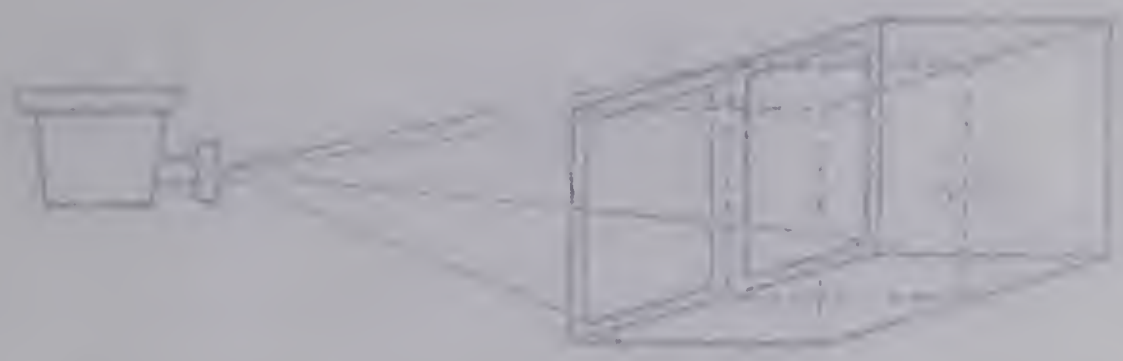

Figure 1 shows the device and procedure in diagrammatic form. A plastic or wooden box is the hardware used. Inside the box, on the transducer end, is fixed with a strong cement, to a sturdy support, some photosensitive material, in the shape of strips, 1cm wide, 10 cm long and 10cm high. The rest of the box is left empty to allow the light to pass through the material. A single lamp illuminates the box from the other end. A single lamp illuminates the box from the other end. A pinhole lens focuses light through the box onto the photosensitive material.

The process that constitutes the act of hearing may actually be more elaborate.

Hypothesis: One of the simplest models that can demonstrate the phenomenon of physiological and psychological hearing consists of a single and functional receptor cell or the sensitive surface of the transducer, in a sensitive receptor, a single lamp illuminating the transducer on its background, a receptor or lens to focus a distinct image onto the transducer, and a single lamp. Conversely, a receptor insensitive to light or dark and a lamp with variable intensity.

The receptor transducer measures a modification of the sound

The one problem which was encountered was not a mechanical one. It became obvious at the very beginning that the material which was to be projected, magazine advertisements, was quite complicated compared to the material previously used by researchers using this stereoscopic technique. Advertisements contain not only pictures, but wording of various sizes. Colour combinations within the ad also added to the complexity of the stimuli. Thus, it became necessary to adjust the usual length of exposure in such a manner as to make it possible to perceive the pictures being presented and yet retain the "just-perceptible" effect upon which the technique depends. It is essential that the subject have only enough time to perceive the pictures, without actually being cognizant of them. What was needed was a shutter speed which was slow enough to allow an image to be formed on the retina and fast enough to prevent the subject from reporting both pictures or from cognitively appreciating both pictures for such a period of time as to allow her to choose consciously which picture she would report.

Extensive preliminary testing was conducted in an effort to find such a shutter speed. The preliminary studies indicated that 1/25 of a second allowed "time for perception" without "time for recognition." It is interesting to note that highly complex material such as advertisements could be seen at a shutter speed of just half the speed of 1/50 of a second normally used for simple stimuli.[16]

---

[16] Shutter speeds as fast as 1/125 have been used with extremely simple stimuli at the University of Alberta by the psychology department.

Colour advertisements of all varieties were clipped from magazines of the large size, (10" x 13"). These advertisements were paired using several criteria such as colour similarity and similarity in terms of writing position and size of photographs. It was felt that colour matching would reduce the effect of colour dominance especially found in reds. About one hundred pairs of advertisements were photographed, each pair being different. Of these, forty pairs contained a brassiere and/or girdle advertisement using actual models. These ads were paired with non-brassiere and/or girdle advertisements of like layout and colour. The brassiere-girdle advertisements, from here on referred to as the CRITICAL PICTURES, were alternated from left to right positions.

Alternating the critical pictures assured that the effects of optic dominance would be eliminated. Eleven critical pictures appeared on the right side, the remaining nine on the left.

All of the slides were photographed against a dull black background so that in projection the only light appearing on the viewing screen would be that of the advertisement. The result was that extraneous light and other material were eliminated from the viewing field.

Pre-experimentation with various slide projectors indicated that the use of too strong a bulb would result in an image being sharply produced on the retina which would "last" after the 1/25 of a second exposure. Thus it was decided to use a 300 - watt projector as opposed to a 500 - watt, which required stopping down the lens aperture. The 300 - watt projector produced a bright image without "burning

it in" on the retina. The aperture setting of the lens was f 3.5.

The translucent screen was of high quality material which produced a clear-cut image to the viewer. The dull side of the screen was mounted facing the viewer so that a three-dimensional effect was created. This illusion of depth is produced by the nature of the plastic material and screen coated on one side.

It was decided as a result of the preliminary studies that a "warm-up" series of slides would be presented each subject just prior to the "actual" run of fifty slides. Preliminary studies indicated that not only did the subjects need a warm-up period to accustom them to the device, but that some also required that their "blocks" to saying brassiere or girdle be broken down. Twenty slides were chosen for the warm-up series, though in most cases the warm-up required no more than twelve slides. In the warm-up series, the eighth and thirteenth slides were used to break down verbal inhibitions and are labelled "forcers."

This preliminary testing was conducted on subjects outside the population from which the control and experimental groups were selected. Thus contamination of the subjects of report has been avoided.

PROCEDURE:

The study may be considered in three phases. Phase One involves the determination of some base against which perceptual change can be measured. Phase Two is the "educational" segment of

the study. Over a period of five weeks, in bi-weekly sessions, subjects were asked to judge the quality of actual advertisements clipped from magazines. This phase is critical in that the experimental group was exposed to brassiere-girdle advertisements, while the control group rated "innocuous" ads. Phase Three measures change in perceptual sensitivity.

Phase One:

The First Phase, like the Third Phase, consisted of fifty paired projections of advertisements shown at 1/25 of a second. Of the fifty paired projections, twenty were Critical Slides (defined on page 15). Thus the number of Critical Slides perceived out of the twenty constitutes the base score in Phase One and the comparison score in Phase Three. Both experimental and control groups were run through this series.

Fifty paired projections were used in an effort to conceal the Critical Slides so that the subjects would not become aware of the nature of the enquiry. As noted before, concerted effort was made to influence the subjects to think that the study was concerned with all forms of advertising. Investigation at the conclusion of the study revealed that the thirty non-critical slides accomplished this desired end. Quizzing the subjects at the conclusion of the study as to what they thought the study was about resulted in numerous wrong guesses, recorded in Table II. Most subjects believed that the test was concerned with their responses to

various advertising slogans and layout, while others had no idea. The special efforts to conceal the nature of the study were successful in preventing contamination by subject "test awareness."

TABLE II.

SUBJECTS' IMPRESSIONS OF THE PURPOSE OF THE STUDY#

a. "It's some kind of intelligence test, you want to see how bright we are by these advertisements."

b. "Advertising companies want to find out which ads are best."

c. "Something to do with advertisements, maybe whether we would buy something."

d. "There were lots of advertisements for Coke, maybe Coke is sponsoring the study to see about their advertising."

e. "You wanted to see how we responded to kinds of advertising and if we would buy the products."

f. "There were quite a few pictures of underwear, but there were also a lot of other kinds of pictures, I really don't know what it was about. Guess you were just studying advertising of all kinds."

g. "I don't know, but I sure liked looking at all of the fashions."

#Subjects were asked to tell what they thought the purpose of the study was at a small party given for them at the conclusion of the testing. Responses were few in number. In no case was the purpose discovered by a subject.

Subjects were scheduled in fifteen-minute intervals for Phase One, allowing ample time for the warm-up series and the actual test series. At the beginning of Phase One, each subject

was given a series of warm-up slides. This allowed adjustment to the dark and to the procedure.

The subjects were told to report all that they saw with both eyes or only one eye if they only saw one picture. They reported to a female stenographer sitting next to them. The projectionist, a male, was unable to hear their responses. This insured that the subjects would not be inhibited by having to report seeing a brassiere or girdle to a male recorder.[17]

Slides number eight and thirteen were the "forcer slides" in the warm-up series. That is, the "forcer slides" contained pictures of brassieres and girdles. Slide eight contained only one picture. The left side of the slide was opaque. The right side of the slide contained a picture of a girl in a brassiere. In this manner the subject was forced to see a brassiere and thus forced into the situation of having to report the same. Slide thirteen contained pictures of brassieres and girdles in both pictures. This too forced the subject.

If the subject reported "brassiere," without hesitancy on slide eight, slide thirteen was omitted. Slide thirteen was only used as a "forcer" in the event the subject blocked or hesitated unduly long on slide eight.

---

[17] Instructions given to the subject: "Tonight we are going to be studying your reaction to all types of advertising. We are going to show you two advertisements at a very fast exposure, and we would like you to report to the recording secretary who is sitting next to you, which advertisements stand out most to you. Try to see both advertisements and try to describe in as much detail as possible all that you see. We will now run through a series of examples to help your eyes become adjusted to the technique and to help you become familiar with the procedure. After you are ready, we will then project a series of fifty pairs of advertisements."

Those subjects who were too inhibited, that is, who blocked on both "forcers" even after several exposures to them, were omitted from the study. If it became clear that the subject would have to be omitted due to excessive resistance, a procedure was followed whereby the subject was not made aware of her omission. Such subjects were given a series of ten non-critical slides, with the secretary keeping notes. Running through this abbreviated series resulted in the subjects being unaware of the fact that they had been rejected and gave them the impression of having participated. The run was abbreviated for two reasons. Generally such subjects were extremely slow perceivers and would disrupt the schedule and also there was no reason to run the entire series of fifty, when it was obvious that their inhibitions were so strong against saying "brassiere" or "girdle" that their perception level could not be determined.

Those subjects who were not able to adjust to the 1/25 speed after extensive warm-up were also rejected. The number of subjects rejected for being too slow or for being overly inhibited was small, i.e., ten and three respectively.[18]

In terms of scoring what was seen and whether or not the Critical Ads were seen, it became evident that a scoring criterion would be necessary. Thus several words other than just "brassiere" and "girdle" were accepted as indications that the ads had been seen, words such as "lingerie" or "undergarments."

---

[18]In addition, 12 subjects were later omitted after Phase One when it was determined that they showed extreme right or left eye dominance.

An experimental and a control group comprised of 30 subjects each were selected from the subjects tested. The two groups were formed through a process of matching on Phase One scores and randomly distributing the paired subjects into either the control or experimental category. The number of Critical Slides perceived by each subject is reported in Table IV, p. 25. The total number of Critical Slides perceived in Phase One by the control group was 198 as compared to 199 in the experimental group. The mean number of Critical Slides perceived is 6.6 for each group.

Phase Two:

The Second Phase of the study consisted of exposing the experimental group to the critical advertisements while the control group viewed non-critical advertisements.

Actual advertisements, clipped from magazines, were given to the experimental and control groups separately for their judgment as to "quality" and "effectiveness" (See Appendix: Rating Sheet).

These groups met twice a week for five weeks and were exposed to 30 advertisements at each meeting. Exposure was limited to one minute per advertisement, which time included completion of the "ad judgment" form for each clipping. In total, then, each subject was exposed to 300 advertisements.

The experimental group differed in exposure from the control group only in that it evaluated 12 Critical Ads, of the 30, each night. The non-critical ads were identical for both groups.

The experimental group, then, received a 40% "dose" of Critical Advertisements as the "indoctrination" course.

To control for the problem of post-session intercommunication between the control and experimental groups, all subjects were reminded at each session not to discuss the test with the other group or between themselves, as their individual judgments were extremely important. The request was apparently well followed as indicated by post-test questioning.

In the event that talking might occur, it was decided to include five Critical Advertisements in the third session control group packet. Thus if the experimental group subjects would have remarked that they had been viewing an excessive number of advertisements for brassieres and girdles, they would encounter the reply that the other group also had this experience.

The effectiveness of this deception rested on the assumption that the actual number of Critical Advertisements given to the experimental group would not have been counted and therefore the definition of what was excessive would be sufficiently devoid of meaning so as to remain unnoticed. It was discovered in post-test interviewing that the few control subjects who had talked with experimental subjects simply thought that the experimental group subjects were being over-sensitive to "one or two pictures of brassieres."

Again the problem of the sex of the experimenter had to be dealt with so as to assure that this would not result in unnecessary inhibitions. The experimental group viewing sessions were conducted by the secretary of Phase One, female, and the control group was led by a male, the author, in separate rooms.

Phase Three:

After all the exposure sessions were completed and the few absences made up, Phase Three, the final phase, was conducted. This retest took place over three evenings. Subjects were scheduled every ten minutes for their projection sessions. Only one repeat of any slide was allowed and this was permitted to occur only after extensive quizzing for any possible image by the recorder. The quizzing made it obvious that there was little chance of having a repeated projection. Perception became much better after one encounter with the probing questions, "Didn't you see any image at all? Are you sure?"

Since subjects were familiar with the stereoscopic technique they warmed-up quickly and the ten minute scheduling proved to be quite adequate. Three slides were generally sufficient to adjust the eyes and the "forcer" (Slide 8) was given in fourth position. If the subject responded "brassiere" to #8, she was given one more slide for deceptive purposes and the series of 50 slides was begun, as in Phase One. Subjects were always told when the actual series began and the warm-up period had ended.

Again, as in Phase One, all responses were recorded. The recording sheets were printed on both sides making it possible to record Phase Three responses on the same sheet used for Phase One for each subject (See Appendix: Recording Sheet).

A schematic diagram of the study is included in Table III. The diagram is divided into three phases and labelled as to the

content in each phase. The simplicity of design made the interpretation of the results quite straightforward.

TABLE III.

SCHEMATIC DIAGRAM OF THE THREE PHASES

PHASE ONE	PHASE TWO	PHASE THREE
Ascertainment of differential thresholds for perception of sex-oriented stimuli.	Introduction of Experimental Variables	Ascertainment of change in differential thresholds for perception of sex-oriented stimuli.

The cooperation of the 60 subjects was excellent throughout the experiment. The majority of the subjects were interested in doing a good job and tried conscientiously to follow instructions. This resulted in the study running smoothly throughout the entire 12 weeks.

RESULTS:

The results, the number of Critical Slides perceived in Phases One and Three, are given in Table IV for both the Control and Experimental Groups. The table also indicates amount of change. The numbers assigned to subjects are matched as the subjects were paired, thus subject 1 in the Experimental Group has her counterpart subject, number 1, in the Control Group.

[illegible] [illegible] [illegible] [illegible]

[illegible] [illegible] [illegible] [

TABLE IV.

NUMBER OF CRITICAL SLIDES PERCEIVED

IN PHASES I AND III BY SUBJECT-PAIRS

IN THE EXPERIMENTAL AND CONTROL GROUPS

SUBJECT PAIR NUMBER CON/EXP	AGE		PHASE ONE/THREE SCORES AND AMOUNT OF CHANGE							
			CONTROL GROUP SUBJECTS				EXPERIMENTAL GROUP SUBJECTS			
			PHASE		CHANGE		PHASE		CHANGE	
	C	E	I	III	+	-	I	III	+	-
1	18	19	3	8	5		3	13	10	
2	18	17	3	6	3		3	13	10	
3	18	19	4	7	3		4	12	8	
4	17	18	4	4			4	4		
5	19	18	4	13	9		4	6	2	
6	18	18	4	4			4	9	5	
7	19	18	4	5	1		5	10	5	
8	17	18	5	2		3	5	13	8	
9	18	18	5	7	2		5	10	5	
10	18	18	5	6	1		5	7	2	
11	18	18	5	6	1		5	11	6	
12	19	17	5	4		1	5	7	2	
13	18	17	5	8	3		6	13	7	
14	18	19	6	4		2	6	9	3	
15	18	19	6	9	3		6	12	6	
16	18	17	6	9	3		6	11	5	
17	18	18	6	7	1		7	12	5	
18	18	19	7	6		1	7	10	3	
19	16	18	7	4		3	7	7		
20	19	18	7	9	2		7	11	4	
21	17	18	8	9	1		8	12	4	
22	18	18	8	8			8	6		2
23	19	18	8	11	3		8	13	5	
24	17	17	8	5		3	8	17	9	
25	18	19	9	9			9	7		2
26	18	20	10	12	2		10	9		1
27	19	18	10	10			10	6		4
28	18	18	10	9		1	10	13	3	
29	17	17	12	10		2	11	12	1	
30	18	17	15	11		4	12	16	4	
TOTAL			199	222	43	20	198	311	122	9
MEANS (N=30)			6.6	7.4	1.4	.67	6.6	10.36	4.0	.3

[illegible]

The mean number of Critical Slides perceived by both groups in Phase One was 6.6. The mean number of Critical Slides perceived in Phase Three was 7.4 for the Control Group as compared to 10.36 for the Experimental Group. In terms of number of Critical Slides perceived, this means that the Experimental Group perceived 113 more Critical Slides (net) in Phase Three as compared to the 23 more Critical Slides (net) by the Control Group.

The null hypothesis that the experimental variable, exposure, had no effect was assumed and tested at the .05 level of significance with a one-tailed test.[19]

With 29 degrees of freedom, if t = 1.699, the null hypothesis would be rejected at this (.05) significance level. The S.D. was calculated to be 3.45, and "t" to be 4.62. The null hypothesis was rejected.

DISCUSSION:

A classic definition of "attitude" holds this term to refer to "a tendency to respond to certain stimuli in a particular manner."[20] The present study demonstrates that forced exposure to stimuli (familiarity) lowers the perceptual limen. This is one measure of attitude change, and it gains significance here because of our use of actual advertising materials, rather than less complex stimuli.

---

[19] A one-tailed test was used because direction of change had been predicted.

[20] Trasler, loc. cit.

As in all studies of attitude, the meaning of this particular form of attitudinal determination for other dimensions of behavior remains at issue.

From this and similar investigations it may be assumed, for example, that the advertiser can increase "product awareness" through repetition. But the relationship between such increased perceptivity of the advertiser's message and action upon it (buying) is a continuing question.

Further, the findings intrude upon the censorship debate. It is clear that exposure to sometimes offensive materials increases the perception of them. What needs to be known is whether such familiarity reduces or increases the emotional valence of these stimuli. That is, does viewing items of secondary sexual content reduce their impact, or does it stimulate other dimensions of attitude and behavior?

BIBLIOGRAPHY

"Advertising: The Mammoth Mirror." Time, LXXX (October 12, 1962), 77-82.

Bagby, J. "A Cross Cultural Study of Perceptual Predominance in Binocular Rivalry." Journal of Abnormal Social Psychology. 54 (1957), 331-334.

Berelson, Bernard and Gary A. Steiner. Human Behavior: An Inventory of Scientific Findings. New York: Harcourt, Brace and World, 1960.

Dichter, Ernest. The Strategy of Desire. New York: Doubleday and Company, 1960.

Edmonton (Alberta) Journal, June 4, 1965 and November 17, 1965.

Engel, E. "The Role of Content in Binocular Resolution." American Journal of Psychology, 69 (1956), 87-91.

Glamour, June, 1963.

Hovland, Carl I. "Effects of the Mass Media of Communication," Handbook of Social Psychology, Vol. II, Gardner Lindzey, editor. Reading, Massachusetts: Addison-Wesley, 1954, 1062-1103.

Hurlock, Elizabeth B. The Psychology of Dress. New York: Ronald Press Company, 1929.

Krugman, Herbert E. "The Impact of Television Advertising: Learning Without Involvement." Public Opinion Quarterly, XXIX (Fall, 1965), 349-356.

Langner, Lawrence. The Importance of Wearing Clothes. London: Constable, 1959.

Lucas, D.B. "A Rigid Technique for Measuring the Impression Values of Specific Magazine Advertisements." Journal of Applied Psychology, XXIV (1940), 778-790.

Lucas, D.B. and Steward H. Britt. Advertising Psychology and Research. New York: McGraw-Hill Company, 1950.

Mademoiselle, October, 1964.

McCall's, September, 1965.

Packard, Vance. The Hidden Persuaders. New York: David McKay Company, 1957.

Putoff, Oval. "A Study of the Perception of Violence." The Research Newsletter, California Department of Corrections, Vol. 4, No. 1-2 (1962), 22-24.

"Q and Advertising." McCall's, (May, 1964), 30.

Redbook, November, 1965.

Rogers, Dorothy. Psychology of the Adolescent. New York: Appelton-Century-Crofts, 1962.

Shelly, E. and Hans Toch. "The Perception of Violence as an Indicator of Adjustment." Unpublished manuscript, Michigan State University.

Silverman, Silvia S. "Clothing and Appearance: Their Psychological Implications for Teen-Age Girls." New York: Bureau of Publications, Columbia University, 1945.

"Sweet Business." Time, LXXIX (March 2, 1962), 52.

Toch, Hans. "The Stereoscope, a New Frontier in Psychological Research." The Research Newsletter, California Department of Corrections, Vol. 3, No. 3-4 (1961), 18-23.

Trasler, Gordon. The Explanation of Criminality. London: Routledge and Kegan Paul, 1962.

"Vogue and Vague: nudes in Exquisite Form bra ads." Newsweek, 65 (March 22, 1965), p. 90.

Wertham, Fredric. Seduction of the Innocent. New York: Rinehart and Co. Inc. 1953.

Wylie, Philip. Generation of Vipers. New York: Rinehart and Co. Inc., 1955.

APPENDIX

Name: _____, _____ Number:
(last)

Age: _____ Group: A B

Score: _____/20

1.	26.
2.	27)
3)	28.
4.	29)
5.	30.
6)	31)
7.	32.
8.	33.
9)	34.
10.	35)
11.	36.
12)	37.
13)	38)
14.	39.
15.	40.
16)	41.
17.	42)
18.	43)
19.	44.
20)	45.
21.	46)
22)	47)
23.	48.
24)	49)
25)	50.

Name: _____, _____ Number: _____
(last)

Age: _____ Group: A B

Score: _____/20

1.	26.
2.	27)
3)	28.
4.	29)
5.	30.
6)	31)
7.	32.
8.	33.
9)	34.
10.	35)
11.	36.
12)	37.
13)	38)
14.	39.
15.	40.
16)	41.
17.	42)
18.	43)
19.	44.
20)	45.
21.	46)
22)	47)
23.	48.
24)	49)
25)	50.

PROCEDURE FOR ADVERTISEMENT EVALUATION

1. Note mentally the "first" impression which you have of the advertisement.

2. Note the product advertised and the brand name.

3. Study the text of the advertisement thoroughly, noting the adjectives in particular.

4. Study the layout of the advertisement, noting its balance, attractiveness, etc.

5. Ask yourself the question, "Would I because of this advertisement consider buying this brand?"

6. Finally, mark the ad judgment sheet.

AD JUDGMENT REFERENCE SHEET

1. AD'S ATTRACTIVENESS (DESIGN)
   a. Very attractive
   b. Attractive
   c. Neutral
   d. Unattractive
   e. Very unattractive

2. APPEAL TO THE AVERAGE TEENAGE GIRL
   a. It would probably cause her to consider buying the product
   b. It would interest her, but probably not cause her to consider buying it
   c. It would not interest her
   d. It would probably offend her

3. COMPOSITION
   a. Ad is well balanced
   b. Ad is not well balanced
   c. Ad is fairly well balanced

4. AD COPY (WRITE-UP)
   a. Excellent
   b. Good
   c. Average
   d. Fair
   e. Poor

5. APPEAL TO ME
   a. I find the ad appealing and I'd probably buy the product if I needed it
   b. I do not find the ad appealing

6. WORDS USED IN THE AD:
   a. Emotional
   b. Descriptive
   c. Reasonable

7. WAS THE PRICE OF THE PRODUCT GIVEN?
   a. Yes
   b. No

8. MAIN ATTENTION GETTING DEVICE (YOU MAY CHOOSE MORE THAN ONE ITEM)
   a. Attention-getting phase or title
   b. Attention-getting colour
   c. Attention-getting picture
   d. No attention-getting device

9. MY OVERALL FEELING IS (CHOOSE ONE LETTER FROM EACH PAIR OF CHOICES)
   a. I am drawn to the product (influenced as you feel the advertiser intended)
   b. I am repelled by the product (the reverse of the intention of the advertiser)

   c. This ad would stand out among other ads
   d. This ad would not stand out among other ads

   e. This ad gives a favorable impression of the product
   f. This ad gives an unfavorable impression of the product

DO NOT WRITE ON THIS SHEET.

1. Product: Brand Name : Full page __ ½ page __ Colour __ B.W. __ 1. 4. 7. 2. 5. 8. 3. 6. 9. _ _ _	2. Product: Brand Name : Full page __ ½ page __ Colour __ B.W. __ 1. 4. 7. 2. 5. 8. 3. 6. 9. _ _ _	3. Product: Brand Name : Full page __ ½ page __ Colour __ B.W. __ 1. 4. 7. 2. 5. 8. 3. 6. 9. _ _ _	4. Product: Brand Name:: Full page __ ½ page __ Colour __ B.W. __ 1. 4. 7. 2. 5. 8. 3. 6. 9. _ _ _	5. Product: Brand Name : Full page __ ½ page __ Colour __ B.W. __ 1. 4. 7. 2. 5. 8. 3. 6. 9. _ _ _
6. Product: Brand Name : Full page __ ½ page __ Colour __ B.W. __ 1. 4. 7. 2. 5. 8. 3. 6. 9. _ _ _	7. Product: Brand Name : Full page __ ½ page __ Colour __ B.W. __ 1. 4. 7. 2. 5. 8. 3. 6. 9. _ _ _	8. Product: Brand Name : Full page __ ½ page __ Colour __ B.W. __ 1. 4. 7. 2. 5. 8. 3. 6. 9. _ _ _	9. Product: Brand Name : Full page __ ½ page __ Colour __ B.W. __ 1. 4. 7. 2. 5. 8. 3. 6. 9. _ _ _	10. Product: Brand Name : Full page __ ½ page __ Colour __ B.W. __ 1. 4. 7. 2. 5. 8. 3. 6. 9. _ _ _
11. Product: Brand Name : Full page __ ½ page __ Colour __ B.W. __ 1. 4. 7. 2. 5. 8. 3. 6. 9. _ _ _	12. Product: Brand Name : Full page __ ½page __ Colour __ B.W. __ 1. 4. 7. 2. 5. 8. 3. 6. 9. _ _ _	13. Product: Brand Name : Full page __ ½ page __ Colour __ B.W. __ 1. 4. 7. 2. 5. 8. 3. 6. 9. _ _ _	14. Product: Brand Name : Full page __ ½page __ Colour __ B.W. __ 1. 4. 7. 2. 5. 8. 3. 6. 9. _ _ _	15. Product: Brand Name : Full page __ ½ page __ Colour __ B.W. __ 1. 4. 7. 2. 5. 8. 3. 6. 9. _ _ _
16. Product: Brand Name : Full page __ ½ page __ Colour __ N.W. __ 1. 4. 7. 2. 5. 8. 3. 6. 9. _ _ _	17. Product: Brand Name : Full page __ ½ page __ Colour __ N.W. __ 1. 4. 7. 2. 5. 8. 3. 6. 9. _ _ _	18. Product: Brand Name : Full page __ ½ page __ Colour __ B.W. __ 1. 4. 7. 2. 5. 8. 3. 6. 9. _ _ _	19. Product: Brand Name : Full page __ ½ page __ Colour __ B.W. __ 1. 4. 7. 2. 5. 8. 3. 6. 9. _ _ _	20. Product: Brand Name : Full page __ ½ page __ Colour __ B.W. __ 1. 4. 7. 2. 5. 8. 3. 6. 9. _ _ _
21. Product: Brand Name : Full page __ ½ page __ Colour __ B.W. __ 1. 4. 7. 2. 5. 8. 3. 6. 9. _ _ _	22. Product: Brand Name : Full page __ ½ page __ Colour __ B.W. __ 1. 4. 7. 2. 5. 8. 3. 6. 9. _ _ _	23. Product: Brand Name : Full page __ ½ page __ Colour __ B.W. __ 1. 4. 7. 2. 5. 8. 3. 6. 9. _ _ _	24. Product: Brand Name : Full page __ ½ page __ Colour __ B.W. __ 1. 4. 7. 2. 5. 8. 3. 6. 9. _ _ _	25. Product: Brand Name : Full page __ ½ page __ Colour __ B.W. __ 1. 4. 7. 2. 5. 8. 3. 6. 9. _ _ _

26. Product: Brand name: Full page __ ½ page __ Colour __ B.W. __ 1. 4. 7. 2. 5. 8. 3. 6. 9. _ _ _	27. Product: Brand name: Full page __ ½ page __ Colour __ B.W. __ 1. 4. 7. 2. 5. 8. 3. 6. 9. _ _ _	28. Product: Brand name: Full page __ ½ page __ Colour __ B.W. __ 1. 4. 7. 2. 5. 8. 3. 6. 9. _ _ _	29. Product: Brand name: Full page __ ½ page __ Colour __ B.W. __ 1. 4. 7. 2. 5. 8. 3. 6. 9. _ _ _	30. Product: Brand name: Full page __ ½ page __ Colour __ B.W. __ 1. 4. 7. 2. 5. 8. 3. 6. 9. _ _ _
31. Product: Brand name: Full page __ ½ page __ Colour __ B.W. __ 1. 4. 7. 2. 5. 8. 3. 6. 9. _ _ _	32. Product Brand name: Full page __ ½ page __ Colour __ B.W. __ 1. 4. 7. 2. 5. 8. 3. 6. 9. _ _ _	33. Product: Brand name: Full page __ ½ page __ Colour __ B.W. __ 1. 4. 7. 2. 5. 8. 3. 6. 9. _ _ _	34. Product: Brand name: Full page __ ½ page __ Colour __ B.W. __ 1. 4. 7. 2. 5. 8. 3. 6. 9. _ _ _	35. Product: Brand name: Full page __ ½ page __ Colour __ B.W. __ 1. 4. 7. 2. 5. 8. 3. 6. 9. _ _ _